IF IN DOUBT ASK M.M.E.

DO NOT SCALE THE DRAWING

ALL DIMENSIONS ARE IN mm UNLESS OTHERWISE STATED

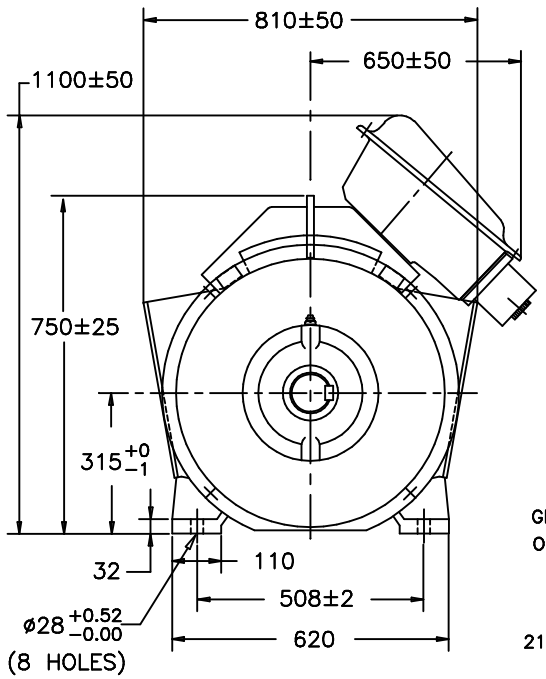

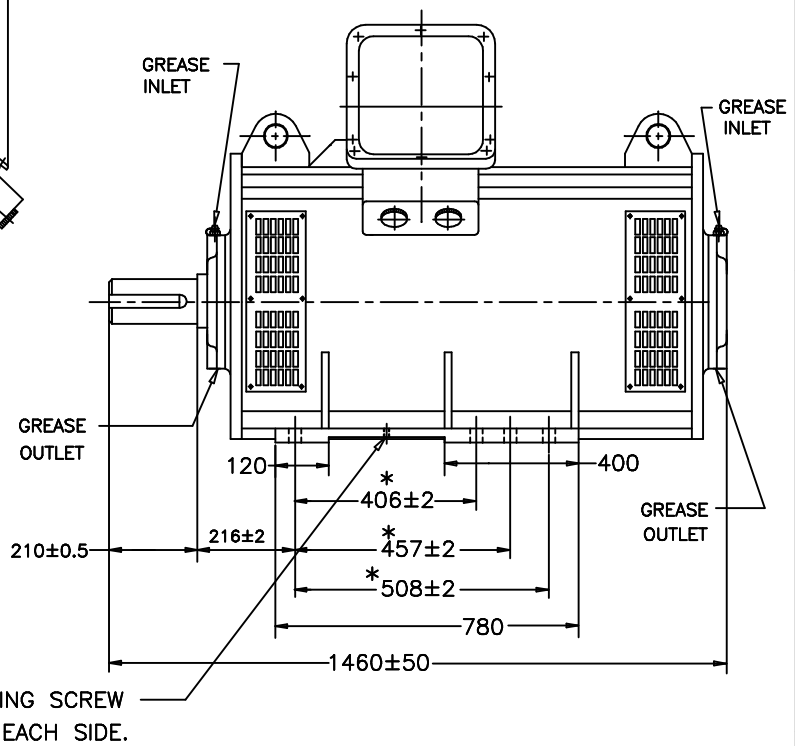

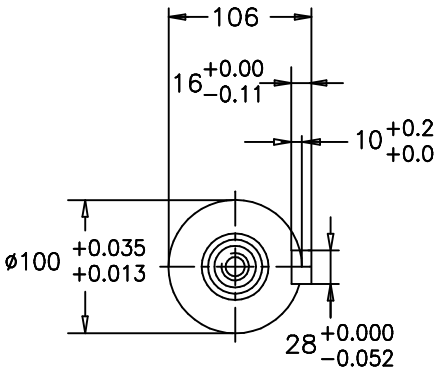

SHAFT EXTENSION DETAILS

NOTE:–

1. MOTOR CONFIRMS TO IS: 325.
2. DEGREE OF PROTECTION: IP:22.
3. PROTECTED CENTER HOLE "M24X50" DEEP AS PER IS: 2540 AT SHAFT EXTENSION.
4. TERMINAL BOX CAN BE ROTATED THROUGH 360° IN STEPS OF 180°.
5. * 3 PAIRS OF MOUNTING HOLES ARE PROVIDED ON MOTOR AT NON DRIVE END SIDE, CUSTOMER CAN CHOOSE ANY ONE PAIR FOR FOUNDATION.
6. 4 NOS. OF M10 SCREWS, ONE ON EACH FOOT PAD FOR JACKING PURPOSE.
7. DIMENSIONS WITHOUT TOLERANCE, ARE FOR REFERANCE ONLY.

ALL INFORMATION CONTAINED IN THIS DOCUMENT IS CONFIDENTIAL AND THE PROPERTY OF KIRLOSKAR ELECTRIC CO. LTD. REPRODUCTION OF THESE IN ANY FORM IS TO BE DONE WITH THE SPECIFIC PERMISSION OF THE COMPANY.

SIGN & DATE. | FROM dt. | DRAWING No.

THIS SUPERSEDES | THIS IS SUPERSEDED BY

CUSTOMER:
PROJECT:

CONSULTANT:
JOB NO.:

MKTG. ACM

REV.	ZONE	BRIEF RECORD	SIGNATURE	DATE	PRINTS ISSUED TO.

CUSTOMER / O/A No.

SCALE NTS

USED ON / TYPE
FRAME: SA315LX kW, SRPM

DRAWN	HRN	21 03/07
CHECKED	HCR	–,–
APPROVED	HCR	–,–

TITLE:
DIMENSIONAL DRAWING

DRG. NO. 41100907

SHEET NO. 1 OF 1

KIRLOSKAR ELECTRIC COMPANY LTD. BANGALORE – 560055 (INDIA)

FORM No. 11401037